Reprinted from *Agronomy Journal*
Vol. 84, No. 6

# PORTABLE SOIL CORING SYSTEM THAT MINIMIZES PLOT DISTURBANCE

S. A. PRIOR* AND H. H. ROGERS

## Abstract

**Reliable sampling of belowground components is an essential aspect of agro-ecosystems research. Nevertheless, small plot size, limited access, and remote locations can severely restrict such efforts. To overcome these constraints a light weight, field portable soil coring system was designed. The two-part unit causes virtually no plot disturbance and, in repeated field tests, performed efficiently and reliably. Soil cores greater than 1 m in length and 38 mm in diameter can be taken. The unit uses a pneumatic driver, an electric core extractor, and steel core tubes with clear plastic liners. As many as 24 cores per hour can be collected with this system. The coring system has been found to be ideal for small size plots or where study areas are enclosed.**

COLLECTING SOIL CORES under field conditions to study root distribution, fertility status, and soil physical characteristics is time-consuming, tedious, labor intensive, and highly intrusive to plots. Not only are test plants trampled but soil is often compacted by large sampling machines, thus impacting the very measures they seek to make. This is particularly true when a large number of samples are required and the desired samples are 1 m or greater in depth. Mechanized techniques have been used for soil core collecting, but none have been entirely satisfactory.

Mechanized devices have been developed to take soil cores and many are transported or pulled by large tractors (Bohm, 1979). Ginn et al. (1978) described a hydraulic soil core sampler which could be front mounted on a tractor. This sampler was capable of taking 19 to 102-mm diameter cores to a depth of 1.25 m. It could be positioned laterally anywhere along a 1.02-m toolbar. There are several commercially available hydraulic devices which can be mounted on trucks or three point hitch tractors. In addition, a number of companies supply coring tubes, bits in a wide range of sizes, and other associated equipment (e.g., Clements Associates Inc., Newton, IA; Concord Inc., Fargo, ND; Giddings Machine Co., Fort Collins, CO).[1] Swallow et al. (1987) developed a hydraulic coring machine pulled behind a tractor which could collect soil samples of 250 mm in diameter up to 1-m deep. All of the above devices are dependable. However, because they require transport vehicles, they are best used early in the season before crop height prohibits access or at season's end after yield data have been collected and, consequently, crop damage is not a major consideration. These devices can also cause considerable soil disturbance within study plots and, unless plots are large, such intrusions can be highly destructive. In many studies, plot size is limited, and sequential sampling over the course of the crop growth cycle is desirable. In many instances, it is also necessary to have a system with which soil cores can be obtained quickly with least impact. This occurs when coring must be done between key events such as chemical application and irrigation.

Herein we describe a portable hand-operated system which can conveniently extract soil cores. This consists of modifications of a commercially available pneumatic driver (air hammer) and metal soil tubes, and the design of a pulling device for the retrieval of soil core tubes. Our goal was to construct a light weight, portable system for taking deep samples rapidly and with minimal disturbance.

## Construction and Operation

The core driver used was a modified pneumatic post driver weighing 20 kg (Table 1, Fig. 1A). It was designed to drive posts up to 60 mm (2.375 in) in diameter using appropriate adaptors. This unit could deliver 350 blows per minute at 6.9 X $10^5$ Pa with an average air consumption of 76 $m^3$ $h^{-1}$. A 1.5 m section of 13-mm air hose with a 13-mm air inlet connected the driver to a line lubricator (Fig. 1B). Custom-made driving heads for the soil core tubes were machined from a steel rod (Fig. 2H). Reducing adaptors were constructed to handle the driving heads which were inserted into the upper end of core tubes by machining a 102 mm (4 in) aluminum rod to 82 by 67 by 152 mm (3.25 by 2.625 by 6 in; OD by ID by L). The handles of the core driver were shortened (Fig. 2E) to allow it to operate as close as 76 mm (3 in) from the soil surface. The valve trigger mechanism was rotated 180 degrees and relocated on the handle for easy activation which made it much easier for the operator to apply the downward force necessary during core sampling. (Fig. 1C and Fig. 2C).

Air supply for the core driver was delivered by a rotary screw air compressor. The model used could deliver 297 $m^3$ $h^{-1}$ at 6.9 × $10^5$ Pa and it is commonly available at rental companies (Table 1). Because distance from vehicle access roads to study plots varied, four 15-m (50 ft) sections of 19-mm (0.75 in)

Table 1. Components list and current cost of items.

| Components | Cost |
|---|---|
| Pneumatic Post Driver (Kittyhawk Model 750A; Hawk Industries, Inc., Long Beach, CA) | $ 1900 |
| Core Tube (Model 51-505; molychrome steel) | 90 |
| Core Tube Bit (Model 134 heavy duty, quick relief) | 43 |
| Butyrate Core Tube Liner (Model BL1750) | 20 |
| Caps for Liner (Model BC1750; Giddings Machine Co., Ft. Collins, CO) | 16† |
| Electric Winch (Model 4Z327; Dayton Electric Mfg. Co., Chicago, IL) | 312 |
| Electric Generator (Coleman Powerbase 2250; Coleman Powermate, Inc., Kearney, NE) | 374 |
| Aluminum Pipe, schedule 40 | 27 |
| Aluminum Flat Bar | 17 |
| Aluminum Channel | 4 |
| Rubber-covered Handles (pair) | 10 |
| Oil-impregnated Bronze Bushings | 2 |
| Capscrews, Lockwashers, Hexnuts | 3 |
| Steel Rod and Tubing | 25 |
| Air Compressor Rental | 45‡ |

† Cost per 100 caps.
‡ Cost per day.

[1]Trade names and products are mentioned solely for information. No endorsement by the USDA is implied.

S.A. Prior* and H.H. Rogers, USDA-ARS National Soil Dynamics Laboratory, Box 3439, Auburn, AL 36831–3429. Received 14 Oct. 1991. *Corresponding author.

Published in Agron. J. 84:1073–1077 (1992).

hose with male and female coupling devices were combined in various lengths to reach plots.

Each molychrome steel soil core tube measured 51 by 45 by 1283 mm (Fig. 1D). Six matching tubes were fitted with 51 mm (2 in) heavy duty quick relief coring bits. Core tubes were designed to hold clear butyrate liners (Giddings Machine Co., Fort Collins, CO). The actual soil core was collected in these liners and capped

**Fig. 1. Photograph of the pneumatic core driver for soil sampling: A. core driver, B. line lubricator leading to main air supply, C. valve trigger mechanism, and D. soil core tube.**

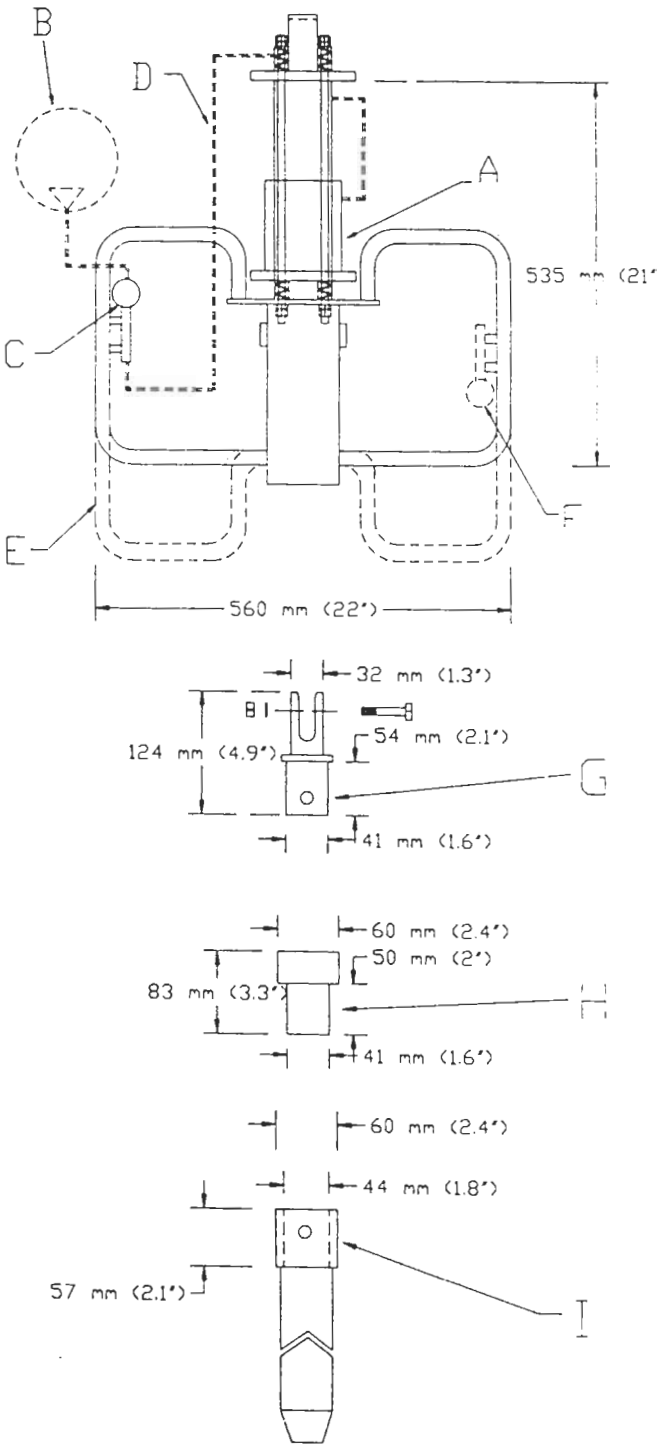


**Fig. 2. Schematic of the pneumatic core driver, driving head, and pulling adaptor: A. core driver, B. main air supply, C. relocated valve trigger mechanism, D. air supply line, E. original location of handles, F. original location of valve trigger mechanism, G. core tube pulling adaptor, H. driving head, and I. core tube with reinforced steel collar.**

for future processing. To minimize tube damage during the core driving process, the tops of the tubes were reinforced with a steel collar (Fig. 2I). A hole was drilled in the center of the collar to match the preexisting hole of the core tube and core pulling adaptors (Fig. 2G and Fig. 3A). A blunt tip screwdriver was

**Fig. 3. Photograph of the winch-operated tube extractor: A. winch hook/adaptor assembly, B. pulley wheel, C. vertical structural member, D. base plate stand, E. electric winch, and F. handles.**

inserted through this hole to attach adaptor to tube during extraction. The adaptors' original stems were replaced with a slotted steel tube (Fig. 2G). A bolt was inserted in this hole for attaching a hook which was connected to the core tube extractor cable when pulling the sample.

A tube extractor was designed and constructed using an electric winch system (Fig. 3 and Fig. 4). Major components of the aluminum extractor frame were a free-spinning pulley wheel (Fig. 3B and Fig. 4D) mounted atop a vertical structural member (Fig. 3C and Fig. 4C) which was connected to a base plate (Fig. 3D and Fig. 4H). The winch-operated extractor weighed approximately 23 kg. Detailed specifications of the extractor frame are given in Fig. 4. An electric winch (Table 1) weighing 16 kg was mounted on the tube extractor frame (Fig. 3E and Fig. 4A). This 559W winch had a gear ratio of 584:1 with a working and stall load of 1226 and 1816 kg. The winch had a 6 mm cable and hook assembly that extended over the wheel for attachment to the core tube. The winch motor was standard 115 VAC, 60 Hz, single phase. Electric power was provided by a gasoline generator (Table 1).

A components list with current costs for both the core driver and extractor system are shown in Table 1. Details for each device are given in Fig. 2 and 4.

## Discussion

Soil core sampling utilizing the core driver and winch-operated extractor were used successfully in mid-June and early August 1991 on a Trix clay loam: fine, loamy, mixed (calcareous), hyperthermic Typic Torrifluvent where cotton [*Gossypium hirsutum* (L.) 'Delta Pine 77'] was being grown in Maricopa, AZ. The portable nature of the core driver allowed for precise positioning of core tubes during sampling with virtually no disturbance to surrounding areas. At the initial sampling, minimal applied force was required to drive the soil core tube, whereas at the latter period slightly more force was often necessary to drive the core to the desired depth. At each sampling period, the time required to drive a core varied between 8 to 10 and 15 to 30 s, respectively. The increase in core driving time and the additional force required to drive the soil core tube at the latter sampling were probably due to soil consolidation from irrigation and an increase in root fabric. The electric winch extractor pulled core tubes in approximately 30 s irrespective of sampling date. Keeping the thrust of the core driver along the center line and the jack perfectly vertical allowed for easier driving and pulling, and reduced the risk of overheating the motor. The light weight of the tube extractor allowed it to be transported and positioned within a tall crop without intruding into adjacent areas. The fast drive time coupled with the use of an electric winch to extract cores permitted sampling to be done in a timely fashion. At each sampling period, a total of 384 cores were collected in a 2-d period. The cores provided useful data on root development, rhizosphere microbiology, and soil physical properties.

Belowground samples, with minimal disturbance, will have to be taken wherever important root and soil processes are to be studied. This system will be beneficial in studies requiring soil, rhizosphere, or root sampling where access is limited and plot sizes are small. In particular, this system would allow quick soil core extraction within narrow windows of operation time.

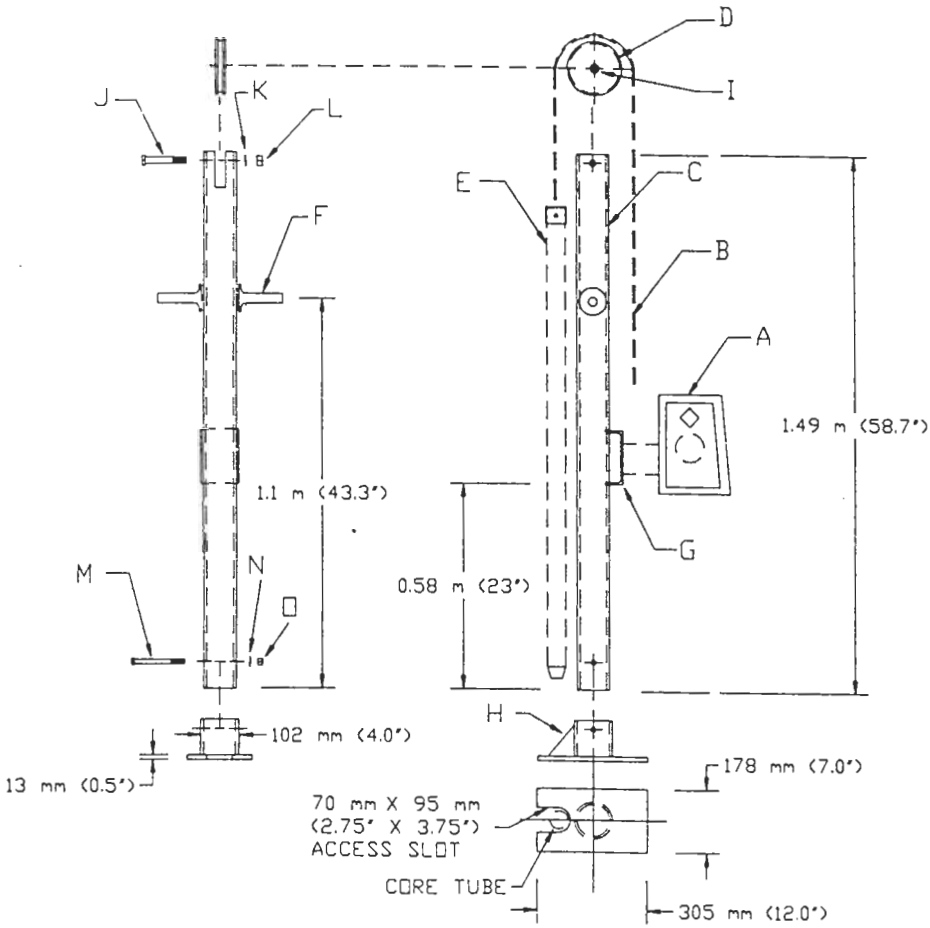


**Fig. 4. Schematic of a winch-operated tube extractor: A. electric winch, B. 6 mm (0.25 in) steel cable, C. 89 mm (3.5 in) by 76 mm (3 in) by 1.5 m (58.688 in) aluminum pipe (schedule 40), D. 152 mm (6 in) diam. pulley, machined from 6061-T6 aluminum flat bar, E. core tube, F. handles, G. 152 mm (6 in) aluminum channel cut 101 mm (4 in) long, H. baseplate, I. 25 mm (1 in) by 19 mm (0.75 in) by 25 mm (1 in) oil impregnated bronze bushing, J. 19 mm (0.75 in) by 114 mm (4.5 in) hex head Grade 5 plated capscrew, K. 19 mm (0.75 in) plated lockwasher, L. 19 mm (0.75 in) plated hex nut, M. 12 mm (0.5 in) by 139 mm (5.5 in) hex head Grade 5 plated capscrew, N. 13 mm (0.5 in) plated lockwasher, and 0.13 mm (0.5 in) plated hex nut.**

### Acknowledgment

Partial support of this effort by the Environmental Sciences Research Division, U.S. Department of Energy through Interagency No. ER60001 to the ARS-USDA, and the Alabama Agricultural Experiment Station, Auburn University, under AAES Research Grant 2-33130 is gratefully acknowledged. The authors are indebted to John H. Walden, Bob H. Washington, and Bernard E. McLean for technical assistance.

## REFERENCES

Bohm, W. 1979. Core-sampling machines. p. 43–45. *In* Methods of studying root systems. Spring-Verlag, New York.

Ginn, L. H., L.G. Heatherly, and W.J. Russell. 1978. Assembly for mounting hydraulic soil core sampler on tractor front. Agron. J. 70:512–514.

Swallow, C.W., D.E. Kissel, and C.E. Owensby. 1987. Soil coring machine for microplots and large soil cores. Agron J. 79:756–758.