COMMUN. SOIL SCI. PLANT ANAL., 25(5&6), 517-522 (1994)

A MANUAL SOIL CORING SYSTEM FOR SOIL-ROOT STUDIES

S. A. Prior and H. H. Rogers

National Soil Dynamics Laboratory, Agricultural Research Service, U.S. Department of Agriculture, P.O. Box 3439, Auburn, AL 36831-3439

ABSTRACT: Factors such as small plot size, restricted access, and remote sites can often limit adequate sampling of belowground components in field research. Thus, the objective of this study was to design and construct a simple, inexpensive, portable soil coring system for rapid deployment under field conditions which eliminated some or all of the above mentioned limitations. Components of the system included a manual driver of adjustable weight, a manual core extractor, and steel core tubes with clear plastic (butyrate) liners which encase the soil core for retrieval and transport. This system proved to be reliable and efficient in repeated field trials, causing minimal plot disturbance. The use of Styrofoam plugs to separate multiple core samples within the plastic liner drastically reduced the time spent on handling individual samples. Continuous soil cores measuring up to 1 m long can also be collected with this system. The use of plastic liners also greatly facilitated the transport and storage of samples. This low cost system was convenient to operate and assemble or disassemble in a field setting. The unit proved to be effective in cases where mechanized approaches were prohibited or unavailable.

INTRODUCTION

An important aspect of field research involves obtaining representative soil samples for the study of such things as soil water content, fertility status, rhizosphere microbiology, soil-borne pathogens, and root growth. Hydraulic devices transported by large tractors have reduced the time and labor required for

Copyright © 1994 by Marcel Dekker, Inc.

taking soil cores (Schickedanz et al., 1973; Ginn et al., 1978; Bohm, 1979; Vaughan et al., 1984; Swallow et al., 1987). However, since such devices are highly intrusive, they have limited use in studies requiring sequential sampling (during the plant growth cycle) in small research plots. In such cases, auger/coring methods as described by Bohm (1979) and others (Wells, 1959; Hayden and Heinemann, 1968; Jackson, 1986; Karahashi et al., 1987; Atkinson and Mackie-Dawson, 1991) can be used. These methods must often be modified to ensure that soil cores can be obtained (with the least disturbance possible) within short operation times (*e.g.*, between chemical applications, irrigation, etc.).

This article describes a manual method for extraction of soil cores in a timely manner with little disturbance to research plots. This sampling system consists of a manual driver of adjustable weight, steel core tubes with clear plastic (butyrate) liners, and a lightweight pulling device for the retrieval of soil core tubes. The objective was to develop an inexpensive, portable system (one which could also be easily shipped to remote locations) which could be used for rapid core sampling in different soil series under circumstances where mechanized approaches cannot be used or are not available. Better sampling methods are needed if root and soil dynamics of natural soil profiles are to be fully assessed.

CONSTRUCTION AND OPERATION

The main body of the manual core driver (Fig. 1H) was constructed from a 76 x 610 mm (OD by L) black pipe with a 51 x 102 mm roundstock steel cap welded to the top of the pipe. In the center of this cap, a 13 mm NC threaded hole was made so that either one or two 76 x102 mm weights (4.2 kg) could be bolted on to provide additional weight (Fig. 1G). This variable weight helped adjust driving force and was changed according to soil strength. The weight of the driver could be adjusted from 9 kg (without weight) to 17.4 kg (with two weights). Handles were made from two 13 x 356 mm black pipe bent at 90 degrees 102 mm from each end and welded to the main body.

An automotive ratchet jack (Universal Tool and Stamping Co., Inc., Butler, IN)[1] was modified to extract soil core tubes (Fig. 1A-F). The jack height was increased by welding a 610-mm length of 51 mm OD x 45 ID mm pipe (Fig. 1E)

1. Trade names and products are mentioned solely for information. No endorsement by the USDA is implied.

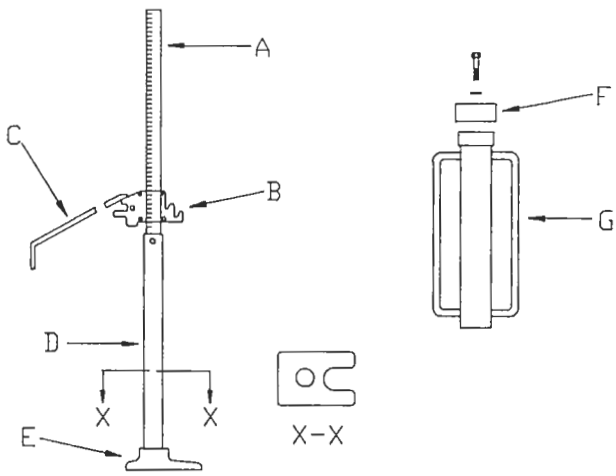

FIGURE 1. Schematic of the ratchet jack and core driver: A. jack stem, B. rachet mechanism, C. jack handle, D. jack stem and extension connection, E. stand extension, F. base plate, G. core driver weight, H. manual core driver. X-X. U-shaped cutout of base plate.

to the base stand (Fig. 1F). The modified jack assembly weighed 13 kg. A 10-mm hole was drilled 38 mm from the top of the 610 mm extension and bottom of the original jack stem. The two pieces were connected by a 76 mm long 10 mm bolt and nut (Fig. 1D). The base plate had a U-shaped cutout measuring 70 mm wide by 95 mm deep to allow placement of the jack assembly directly over the sampling tube (Fig. 1 X-X) for alignment during extraction.

Model 51-505 soil core tubes (Giddings Machine Co., Ft. Collins, CO)[1] measuring 51 x 45 x 1281 mm (OD by ID by L) fitted with 51-mm Model 134 heavy duty quick relief coring bits were used (Fig. 2C). Custom-made heads used on soil core tubes during driving were machined from a 60-mm aluminum rod to a 44 mm diameter 49 mm along its length (Fig. 2A). To minimize tube damage during the core driving process, the top of each tube was reinforced with a 61 x 51 x 57 mm steel collar (Fig. 2C). Eleven mm holes were drilled through the center of the collar to match the preexisting holes of the core tube. A blunt tip screwdriver was inserted through the holes to attach a core tube to the ratchet jack during extraction. Core tubes were designed to hold Model BL 1750 (Giddings Machine Co., Ft. Collins, CO) butyrate liners (45 x 1219 mm). The actual soil core was collected in these liners (Fig. 2E).

Each metal core tube had a strip of brightly colored tape located 300 mm from the core tip to serve as a depth index. The location of the tape could be changed if a

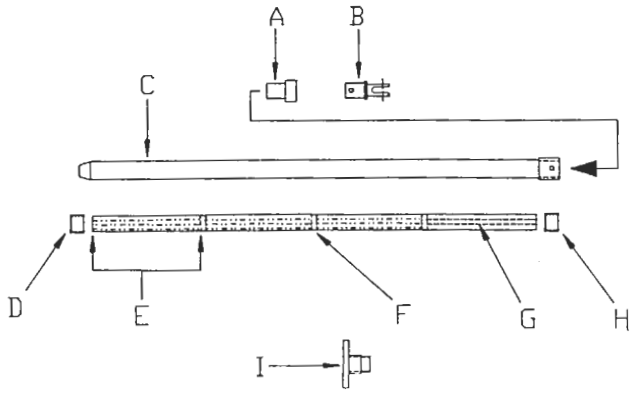

FIGURE 2. Schematic of the metal soil core tube, plastic liner, and custom-made heads used to drive and pull soil cores: A. driving head, B. pulling head, C. soil core tube with quick relief bit and reinforced steel collar, D. bottom rubber cap, E. one 300 mm soil core increment within the plastic liner, F. Styrofoam plug separating soil cores, G. rectangular styrofoam stick, H. top rubber cap, and I. cutter used to fabricate Styrofoam plugs.

different depth increment was needed. In practice, a core tube was driven to a depth of 300 mm (Fig. 2E), pulled, and a cylindrical (12.7-mm thick) tightly fitted Styrofoam (DOW Styrofoam Brand, Residential Sheathing, Extruded Polystyrene Insulation) plug inserted into the lower end to serve as a spacer. This procedure was repeated until three samples were collected in one liner. The Styrofoam plug separated each sample (Fig. 2F) and also allowed easy recognition of each sample during later processing. After the third sample had been collected, the metal soil core tube was placed on a slotted table (wooden, lightweight, at lab bench height) where core-filled plastic liners were removed. The slotted table provided a sturdy, level work surface in the field and aided in keeping samples in order until pre-written, gummed labels could be applied. Once retrieved, samples were capped at the bottom with a soft rubber cap (Fig. 2D and H). Another Styrofoam plug was inserted into the upper end then pushed to contact the soil sample with a rectangular stick of Styrofoam (same material as plug; Fig. 2G). The stick was then broken off even with the sample tube top and the tube capped as at the bottom to stabilize the cores for transport. Different colored caps (Fig. 2D and H) were used at each end for quick orientation during later processing. For subsamples where separation was essential (*e.g.*, soil water content), tubes containing samples were hacksawed into appropriate sections as soon as they were taken.

This system also has been used to collect single continuous soil cores approaching 1 m in length. In such cases, the driving head as described above (Fig. 2A) was extended (650 mm long) to allow the core tube to be driven to the desired depth. During the extraction procedure a chain was used to connect the core tube to the ratchet jack.

The cutter used to make Styrofoam spacers is shown in Figure 2I. The cutter was constructed of a 60 mm length of DOM tubing with a wall thickness of 3.18 mm which was machined to a 0.76-mm wall thickness 25 mm along its length and file sharpened. The handle of the cutter was made of CR-1018 roundstock (16 x 133 mm) which was crosswelded to the blank end of the DOM tubing. The cutter was used in repeated cookie cutter fashion.

The total cost of this system was less than $100, thus providing an economical method of collecting soil cores. The components are readily available and can be assembled in nearly any machine shop.

DISCUSSION

We have used this soil core sampling system since 1988. The system has been used successfully on three soil types: (i) Morganfield silt loam: course-silty, mixed, nonacid, thermic Typic Udifluevents (Yazoo City, MS), (ii) Trix clay loam: Fine, loamy, mixed (calcareous), hyperthermic Typic Torrifluvents (Maricopa, AZ), and (iii) Udorthents (National Mall, Washington, DC).

Overall, this system allows sampling to be done in a timely fashion. The portable nature of the core driver allows for quick, exact positioning of core tubes during sampling with minimal disturbance to surrounding areas. Adjustments in driving force are easily accomplished by adding or subtracting weights according to soil strength. The use of Styrofoam plugs and spacers to separate multiple core samples within a single plastic liner drastically reduces the time spent on handling individual samples. In addition, the use of plastic liners facilitates the transport and storage of samples until processing. The light-weight core tube extractor can be transported and positioned with minimal disturbance of plants and soil in adjacent areas. In many instances, core removal can be done either by hand or by using the ratchet jack to loosen the core tube with subsequent removal by hand.

This inexpensive, portable system allows rapid core sampling in different soil types with little disturbance to surrounding areas. It is well suited for investigations requiring sequential soil, rhizosphere, or root sampling under circumstances where mechanized approaches are prohibited or unavailable.

ACKNOWLEDGMENTS

Partial support of this effort by the Environmental Sciences Research Division, U.S. Department of Energy (Interagency No. ER60001 to the ARS-USDA), and the Alabama Agricultural Experiment Station, Auburn University (AAES Research Grant 2-33130) is appreciated. The authors are indebted to John H. Walden, Bernard E. McLean, and Bob H. Washington for technical assistance.

REFERENCES:

Atkinson, D. and L. A. Mackie-Dawson. 1991. Root growth: methods of measurements, pp. 447-509. IN: K. A. Smith and G. E. Mullins (eds.) Soil Analysis Physical Methods. Marcel Dekker, Inc., New York, NY.

Bohm, W. 1979. Auger methods, pp. 39-47. IN: Methods of Studying Root Systems. Spring-Verlag, New York, NY.

Ginn, L. H., L. G. Heatherly, and W. J. Russell. 1978. Assembly for mounting hydraulic soil core sampler on tractor front. Agron. J. 70:512-514.

Hayden, C. W. and W. H. Heinemann, Jr. 1968. A hand-operated undisturbed core sampler. Soil Sci. 106(2):153-156.

Jackson, D. 1986. A manually operated core-sampler suitable for use on fine-particulate sediments. Est., Coast. and Shelf Sci. 23:419-422.

Karahashi, M., K. Morimoto, T. Goto, and Y. Fuji. 1987. Development of a new soil-core sampler. Japan Agr. Res. Qtr. 21(1):28-35.

Schickedanz, D. M., A. B. Onken, T. Cummings, and R. M. Jones. 1973. A tractor-mounted hydraulically-operated soil sampler for rapid soil coring. Agron. J. 65:339-340.

Swallow, C. W., D. E. Kissel, and C. E. Owensby. 1987. Soil coring machine for microplots and large soil cores. Agron. J. 79:756-758.

Vaughan, D. H., C. B. Murali, and J. H. Wilson. 1984. Soil sampler minimizes soil disturbance. Agr. Eng. 65:24-25.

Wells, C. B. 1959. Core samplers for soil profiles. J. Agr. Eng. 4(3):260-266.